Mechanics and Mechanical Engineering
Vol. 22, No. 4 (2018) 845–863

https://doi.org/10.2478/mme-2018-0065

Analytical Approach to Product Reliability Estimation Based on Life Test Data for an Automotive Clutch System

Hamed Niknafs
R&D Division, Engineering Department, PayaClutch Co.
Rasht Industrial City, Rasht, Guilan, Iran
Hamed.Niknafs@gmail.com

Morteza Faridkhah
Department of Mechanical Engineering, Faculty of Engineering, University of Guilan
Rasht, Guilan, Iran

Camelia Kazemi
R&D Division, Engineering Department, PayaClutch Co.
Rasht Industrial City, Rasht, Guilan, Iran
Hamed.Niknafs@gmail.com

Received (5 January 2018)
Revised (2 May 2018)
Accepted (28 May 2018)

The study of reliability is an important part of engineering design process which forms the basis of analysis and judgment on future performance of the product. Since the future couldn't be predicted with an absolute certainty, the nature of reliability would lead us to probability theory and uncertainty modeling. The quantitative calculation of this parameter for mechanical systems within different steps of production requires an analytical and systematic approach which has been focused in this paper. The proposed approach has been applied for calculating reliability of a clutch system as a case study. The system reliability in this work is determined based on the block diagram method as a function of individual component reliabilities which are calculated by statistical analysis of life test results. Using Weibull model, reliability of a typical clutch system has been formulated based on durability bench test and results has been interpreted to estimate field reliability.

Keywords: Reliability, block diagram, product life, clutch system, Weibull distribution model

1. Introduction

Reliability analysis is one of the most important statistics applications for modern engineering which is in a close relation with life and failure concepts. The relation between equipment and human-machine systems has been increased along with the

rising complexity of modern societies. Nowadays, the subject of reliability as a factor of RAMS program, in systems or products performance is one of the main concerns of designers, manufacturers and costumers. So that the legal responsibility of designer and manufacturer for customer trust and satisfaction is considered as one of the most obvious legal issues of today world. Since engineers have the responsibility for design, manufacturing, and mostly control of these products and systems, they must assure customer requirement services with his desired quality (customer requirement) and a high reliability. Reliability as a method to assure such requirements refers not only to statistics but also to a system of work planning, information gathering and storage. So, the reliability concept has a different interpretation in each step of design, manufacturing, usage and after-sales service of a product [1, 2]. But, the main objective of this essay, is design reliability which is a prediction of product desired performance for a predefined lifetime. Meanwhile, the engineering systems, and their components and structures are not designed, manufactured and utilized so that no failures are allowed to occur. In the other words, design engineers would never be able to design a product in a way which assure its function with absolute certainty and without failures in defined life cycle. That is because there are always limitations related to every product engineering process that effect the design. Nevertheless, with regard to every product design, performance satisfaction throughout designed lifecycle according to the corresponding requirements and standards must be ensured using an engineering criteria. Unreliability of desired performance in design life and occurring unpredicted failure especially in systems with critical running condition could follows with costs and serious risks. Reliability factor as one of the most essential aspects and inputs of product design, is such an engineering criteria which predicts and assures the satisfaction of product performance throughout its design life cycle [2]. Essential aspects of design and development of the product are shown in Fig. 1.

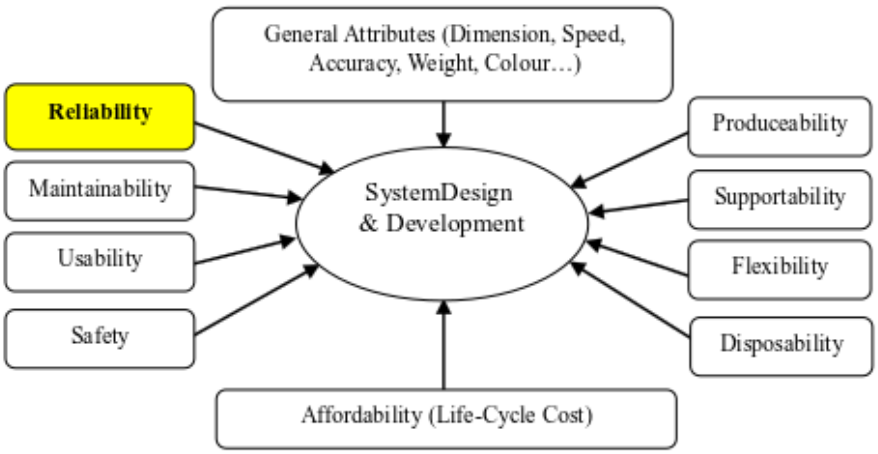

Figure 1 Product design aspects

1.1. *Automotive Clutch system*

The mission of a reliability engineer is to select proper material, dimensions, and processes so that the desired reliability is assured. Reliability of every engineering system involves requirements and properties such as: measurability, meeting working condition and customer requirements, time dependency, confidence level, confidence intervals and explicit definition of failure in system [3].

A clutch is a mechanical system is used whenever the transmission of power or motion must be controlled either in amount or over time. In the simplest application, clutches connect and disconnect two rotating shafts which one shaft is typically attached to an engine or other power unit while the other one provides output power. The most important duty of clutch system in manual transmission of automobile is to engage (transmitting power) and disengage (hold up to transmit power) between engine and gearbox. The additional role of clutch is to damp torsional and rotational (torque and rpm) vibration of engine outputs and axial shocks of engagement as well [4].

A clutch system as shown in Fig. 2 consists of three main parts: Clutch friction disc, pressure plate assembly and clutch release bearing. Each of these main parts have sub-assemblies. This system is connected to clutch pedal through a mechanism (linkage our hydraulic) and the action of engagement and disengagement is controlled during pushing and releasing clutch pedal. Due to applying force on pedal, the force is transmitted to bearing release and then to diaphragm spring of pressure plate mechanism. The Bellville diaphragm spring provides clamp force between pressure plate, friction disc and flywheel during engagement. Appling load to diaphragm spring via release bearing leads to move back of pressure plate and releasing friction disc from flywheel during disengagement situation. This process is repeated within vehicle running and considered as the basis of definition of clutch life test conditions [1].

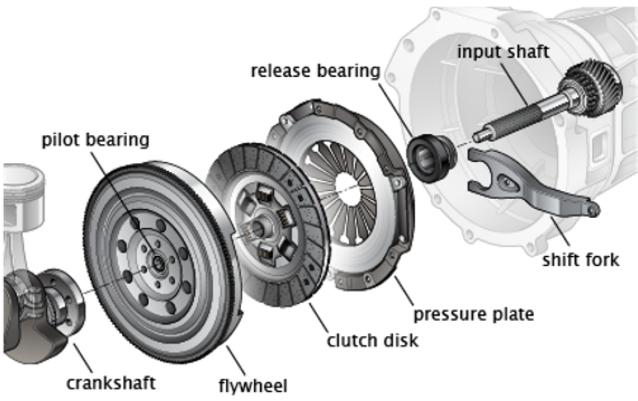

Figure 2 Schematic of clutch in transmission system

1.2. *Definitions*

Reliability is defined as the probability that an item (a part or set of components) will perform its functions satisfactorily, under pre-determined operational conditions (mechanical stresses, thermal stress, humidity, vibration, etc.), without failures for a given period of time (designed life cycle) [1]. For example, when the reliability of a part or a system is expressed to be 0.95 for one million cycles, it means that the part will survive under its working condition for one million cycles with a probability of 95 percent while showing a desired performance. On the other hand, 95 percent of similar parts in same working condition will pass one million cycles. Thus, the probability of system survival during time 0 to t, is defined by reliability or survival function as the following expression (T is a random variable and represents the failure time):

$$R(t) = P(T > t), \quad t > 0\,. \tag{1}$$

Therefore, having probability density distribution function, reliability function is obtained easily from the area under the curve for $(T > t)$ interval.

Failure probability has the opposite concept of the reliability and is defined as failure probability of a part or a set of parts (system) under working condition during predefined life cycle. With this definition we will have:

$$F(t) = 1 - R(t) = P(T \leq 1)\,. \tag{2}$$

Probability density function is referred to a function which represents the statistical distribution of a random variable in integral form. The probability of a random variable (failure time in this case) to lie within $[a, b]$ interval is obtained from the following equation:

$$P(x < X < b) = \int_a^b f(x)dx\,. \tag{3}$$

Failure rate, is defined as the frequency which an engineered system or component fails, expressed in failures per unit of time. Mathematically, the failure rate or Hazard function is obtained by division of probability density function by reliability function [1].

1.3. *Approaches*

Different methods and techniques are presented for quantitative and qualitative analysis of reliability in engineering systems. A set of these methods are shown in Fig. 3. Although the reliability definition is originated from qualitative concepts, but its quantitative explanation in today's engineering analysis is very important. Therefore, different approaches are presented for modeling and analysis of engineering systems reliability which are mostly based on algebraic models. Reliability block diagram method [5], network diagram method [6], Markov modeling [7] and Monte Carlo simulation [8] are some of these quantitative methods.

It is possible to choose one or combination of these methods based on components failure behavior distribution model, the level of complexity and the type of the problem as well. The most common and important method for analytical calculation of mechanical systems reliability based on the component reliabilities, is the block diagram method. In this approach, every system is considered as a set of

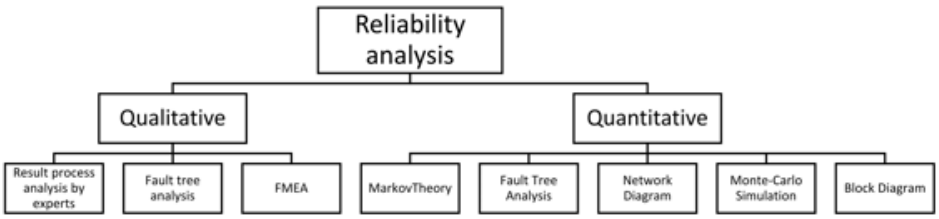

Figure 3 Reliability analysis methods

components so that superposition of their interactions leads to the overall function of system. Therefore, the final goal is to obtain the value of the system reliability based on its individual component reliabilities which are defined as different statistical functions. System reliability is expressed as:

$$\mathrm{Re}_{sys} = f(\mathrm{Re}_{e1}, \mathrm{Re}_{e2}, \mathrm{Re}_{e3}, \ldots)\,. \tag{4}$$

However, achieving other reliability related characteristics such as life, failure probability, hazard rate will be possible in integral form based on probability density function as well [9–11].

1.4. *Strategy*

Nowadays reliability engineering is evolving rapidly in order to development of methods and tools for modeling and analysis of reliability, availability, maintainability and safety for equipment, systems and services. In this context, product reliability as one the most important factors in design outputs should be estimated and validated through a systematic approach. In this essay, product reliability calculation model has been designed and formulated through a systematic algorithm as shown in Fig. 4.

At first step of every design process, product life and reliability as one of the essential inputs must be targeted considering design perquisites, standard requirements, history of pervious designs or similar products, the design target setting, [4]. In the next step, system components are classified into two main groups; critical components and low risk components. This dividing process is performed through criticality analysis using tools like FMECA[1], FTA[2] and RCA[3]. In the first group, there are components which are disposed to failure and high risk. These critical components have the most impact on system reliability and functionality. In the second group, components are not disposed to failure and high risk, and don't have as much effect on system reliability as to be involved in reliability calculations. In this analysis, the knowledge of previous experiences history on product developments and information about failures (types, mechanisms, severities, occurrences) will be very useful and applicable. We can use statistical tools such as *Pareto* analysis of failures to classify and rank importance of each failure. Also, in this study

[1]Failure Modes and Critically Effect Analysis
[2]Fault Tree Analysis
[3]Root Cause Analysis

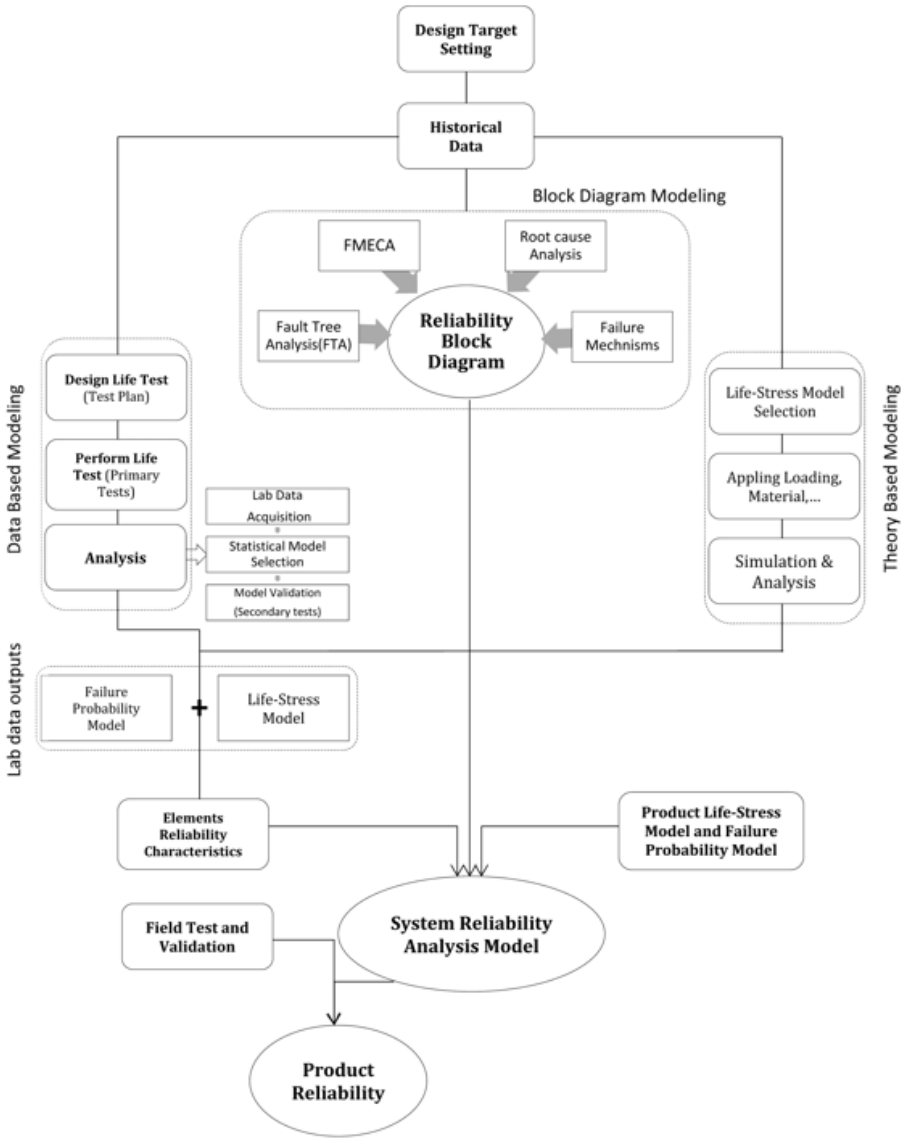

Figure 4 Product reliability analysis process

the type of relation between components function and effect of components failure on the system must be clarified [12, 13].

The *Fault Tree Analysis* would be very efficient in this regard. This analysis is a systematic approach which illustrates all the combinations of system undesired conditions and their causes through a schematic diagram. This method is implemented as a useful tool for prediction of potential failures and product design improvement especially in primary steps of a design [14, 15].

Reliability Block Diagram, is a schematic diagram which represents arrangement of system main components based on their mutual interactions and their effects on system overall function. With this logic, each component will have its two own factors; reliability and weighted impact on system failure. However, in Boolean formulation of reliability based on block diagram, all components of system are considered to have equal weights and they will be judged just as two statuses; function or failure. Based on this definition, different arrangements of reliability block diagram could be defined. Series and parallel or combined form of arrangements may be considered. However, depending on system design maybe we have redundancy. In reliability engineering, designer should arrange the system so that the maximum reliability is achieved considering design targets [16, 17].

The arrangement of reliability block diagram may be obtained based on the fault tree diagram considering its logic operators (and, or) statuses. The series system, is a system which all components are arranged in a unique path from input to output. So each one has a direct impact on the system output function. Therefore, due to failing one of components, the input-output path would be interrupted and system function will be lost. With this definition, using intersection rule (and operator) of algebraic probability, the reliability of a system equals to multiplication of individual reliability of components:

$$\mathrm{R}_{sys}(t) = R_1(t) \cdot R_2(t) \cdot R_3(t) \cdot \ldots = \prod_{i=1}^{n} [R_i(t)] \ . \tag{5}$$

The parallel system, is a system which all components are located in parallel arrangement to each other in which a way that for every component there is a path to connect input to output. Therefore, due to failure of just one of the components, the whole system would not be failed. In the other word, the system is to be designed so that the desired function of the system would be even maintained within surviving only one component. Then according to unions rule (or operator) of algebraic probability for non-mutually exclusive events, the reliability of a parallel system equals to:

$$\mathrm{R}_{sys}(t) = \prod_{i=1}^{n} [1 - R_i(t)] \ . \tag{6}$$

However, in most of practical designs a combined series-parallel arrangement may be involved even considering standby components to satisfying design objectives of reliability improvement [9, 10].

Life Tests Design; since reliability of an engineering product is calculated based on life and failure data, we should have access to product failure data or life-stress models to calculate the reliability corresponding to a predefined design life. If system component life-stress models are available under certain working condition (S-N curve and experimental models), this database could be used to calculate the reliability considering the design loading condition (this process is called *Theory Based Modeling*). Otherwise, life tests may be performed under standard conditions, according to predefined test plans and the results will be used for reliability modeling (*Data Based Modeling*) [18, 19]. Reliability-based test plans may be different depending on objectives of reliability demonstration of a product or design reliability

estimation. Reliability-based tests are often divided into two general categories, *time-terminated* tests and *failure terminated*-tests. In time-based case, test of samples is continued up to a predefined time. Test running time for samples may be the same or different and follows special pattern such as rising. Failure-terminated tests are continued until a type of failure is revealed. Since reliability evaluation is performed based on failure probability function, failure mechanisms and time in tests would be critical. Hence, failure-terminated tests have priority over time terminated case in reliability modeling [20, 21].

The ALT[4] and $HALT$[5] life testing techniques could be used to reduce time and costs of tests. In this methods, the samples are tested under higher stresses than design load levels to speed up the fatigue process. Consequently, the sample failure will occur in a much shorter time comparing with the normal test condition. Then failure mechanisms, life-stress relations and failure probability distribution will be discovered in a shorter time as well. This method will be very effective to reduce the cost and time especially in design validation. However, it is not enough to provide field test confidence, because it has been noticed that field data generate more reliable information for life distribution, since they include environmental exposures which are difficult to simulate in a laboratory. The items that must be considered in the accelerated life tests are acceleration factor (the ratio of normal life over accelerated life), loading or stress types (mechanical, thermal, electromagnetic and etc.) and test conditions including frequency, temperature and etc. [22, 23].

Depending on test loading conditions, sample may be subjected to various types of stresses. Consequently, Different life-stress models may be involved which are presented as approximation of accelerated life behavior. Selecting the type of model will be based on type of the involved stresses and test loading condition which itself must be determined from history of system operation conditions and its major failure mechanisms. Applied stresses may have a constant norm or step-stress. In addition, the effect of test conditions such as temperature, frequency and etc. on the fatigue life must be investigated clearly and considered in equations. If we are encountering different types of stresses simultaneously, combined life- stress models must be implemented. Common life-stress models are: *Exponential* model, *power* model, *Arrhenius* model, *Eyring linear* model, and *Eyring nonlinear* model [1, 22, 23].

After performing life test, we should interpret achieved results through *statistical analysis* and derive best statistical model to approximate data distribution. This model will predict system failure behavior. The most commonly used failure probability distributions are Exponential, Weibull, Gauss or Normal, and Log-Normal. After choosing the best one to describe the behavior of the failure time distribution, it is possible to formulate the reliability model. Because of the nature of the product life and general aspects of failure problem, the *Weibull* distribution is known as one of the most appropriate and widely used failure probability distributions. By using this distribution, modeling of failure Bathtub curve in each step through different scale and shape parameters ranges will be possible [10, 24]. *Weibull* probability density function, cumulative distribution function, reliability and hazard function

[4]Accelerated Life Test
[5]High Accelerated Life Test

are respectively as follows:

$$f(t) = \frac{\beta}{\alpha}\left(\frac{t}{\alpha}\right)^{\beta-1} e^{-\left(\frac{t}{\alpha}\right)^{\beta}}, \tag{7}$$

$$F(t) = \int_0^{\tau} f(t)dt = 1 - e^{-\left(\frac{t}{\alpha}\right)^{\beta}}, \tag{8}$$

$$R(t) = \int_0^{\inf} f(t)dt = e^{-\left(\frac{t}{\alpha}\right)^{\beta}}, \tag{9}$$

$$\lambda(t) = \frac{f(t)}{R(t)} = \frac{\beta}{\alpha}\left(\frac{t}{\alpha}\right)^{\beta-1}. \tag{10}$$

The distribution model must be validated through statistical tests and factors such as P-value, AD-value or other variance analysis characteristic. Then, functions for failure probability density, cumulative failure probability, reliability and failure rate will be determined easily by extracting distribution model parameters.

After determining the reliability block diagram arrangement, in terms of component orders, reliability (survival probability) of system is calculated based on algebraic probability rules as a function of component reliabilities. For example, if all critical components of the system have direct impact on the system failure, as the failure of each one leads to the failure of whole system, the system reliability, is equal to multiplication of every component reliabilities based on the probability intersection rule for independent events. This will decrease the system reliability and increase the risk as well. For this reason, parallel components are implemented to improve the reliability degree on systems with critical running conditions. Such interpreting may be clarified with regard to individual component failure probability plots comparing with system probability plot [10, 25, 26].

After reliability modeling based on lab data, results should be investigated and verified through *Field Tests* under actual conditions. This is because, the final objective of reliability formulation is to ensure product performance and the results of field tests are satisfying and ensuring hereof. Although laboratory tests are designed and performed to simulate product function under real condition, but the effect of some parameters are often neglected in laboratory conditions. However, if we have knowledge base (historical data) of actual parameters effects and failure mechanisms in real conditions comparing with lab test cases, we can estimate actual reliability from lab-based calculated reliability using a correction factor [27–29].

2. Material and Methods

In this paper for modeling and formulating reliability of a system using proposed strategy, we have studied a typical automotive clutch under lab test conditions as a case study. As explained above regarding clutch system operation, Applying load to diaphragm spring via release bearing leads to move back of pressure plate (by a lever mechanism) and releasing friction disc from flywheel during disengagement situation (schematic view in Fig. 5). This process is repeated during vehicle running and considered as basis of definition of clutch life test conditions. In this study we

have investigated failure behavior of diaphragm spring in axial fatigue test. This test is performed for clutch cover assembly which is assembled on test bench machine, and subjected to axial cyclic loading. Test bench machine as shown in Fig. 6 consists of a crank mechanism which is run via an electric motor and a speed inverter for regulating desired test frequency.

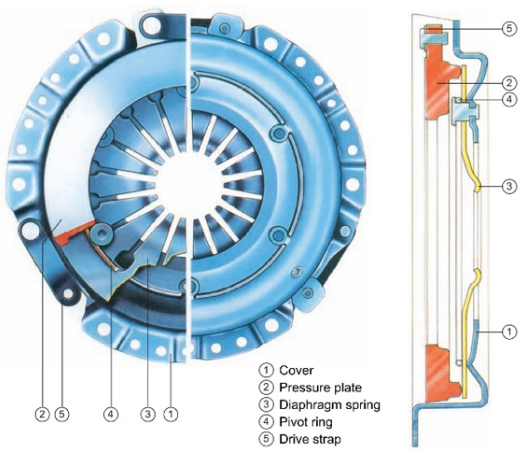

Figure 5 Clutch cover assembly

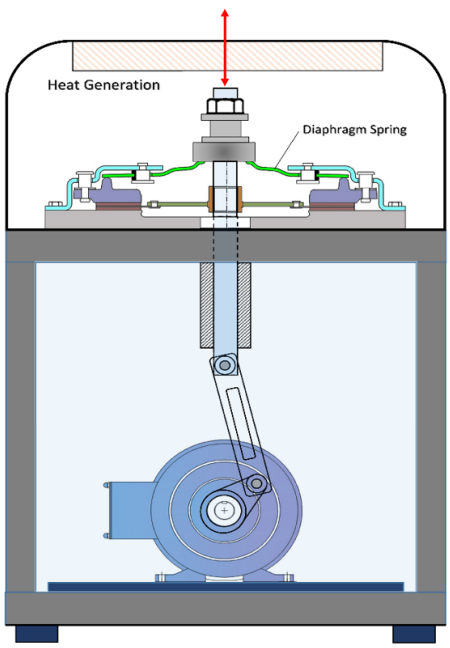

Figure 6 Clutch cover assembly fatigue test machine schematic

During test running, under displacement of bearing, high stress area of (near outer diameter in contact with pressure plate) diaphragm spring will be subjected to periodic stresses like the graph of Fig. 7. Thus, due to fatigue effects of high frequency cyclic loading force-displacement characteristics of diaphragm spring will considerably be degraded and it leads to clutch performance degradation. This test mechanism simulates clutch actuation cycles on vehicles. Force decrement and hysteresis increment are involved as fatigue effect and finally fatigue stresses will cause to crack, facture and failure of the part. Then failure cycles data for samples will be as the base of reliability estimation through statistical analysis for the part.

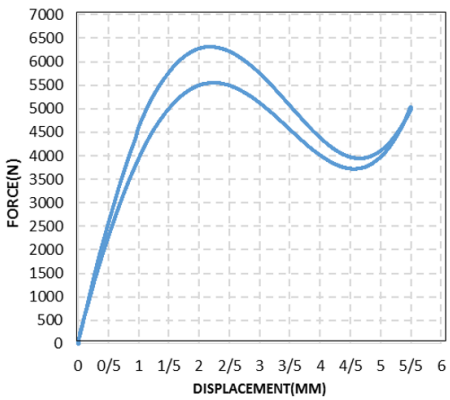

Figure 7 Diaphragm spring load graph

3. Results and Discussions

As discussed above, in reliability study of a system, components are divided into two main groups with respect to risk and criticality level. Accordingly, only components with high criticality level should be considered in reliability calculations. We can specify component criticality levels based on criticality analysis factors (occurrence, severity and detection) through FMECA, RCA and FTA techniques. Using these techniques will require a comprehensive statistical study of failure physics and mechanisms history. Lab test reports and field data coming from returned parts within warranty period will be the key knowledge in this regard.

Fault tree analysis of such clutch system is shown in Fig. 8 just for one of failure modes due to diaphragm spring part. In the top level of diagram four basic case of failure is defined for clutch system which introduce main functions of this product as well. And in the base level all possible cases of system failure due to individual parts (here, diaphragm spring) are presented. Such a diagram represents root level causes of failure and would help us to construct correct structure of reliability block diagram.

Figure 9 represents Pareto chart of failure occurrence for clutch under study resulted from history of all failures categorized into individual parts failure. Data for this analysis has come from field results of returned part within a given period of time. From this Pareto chart and considering criticality analysis factors, we

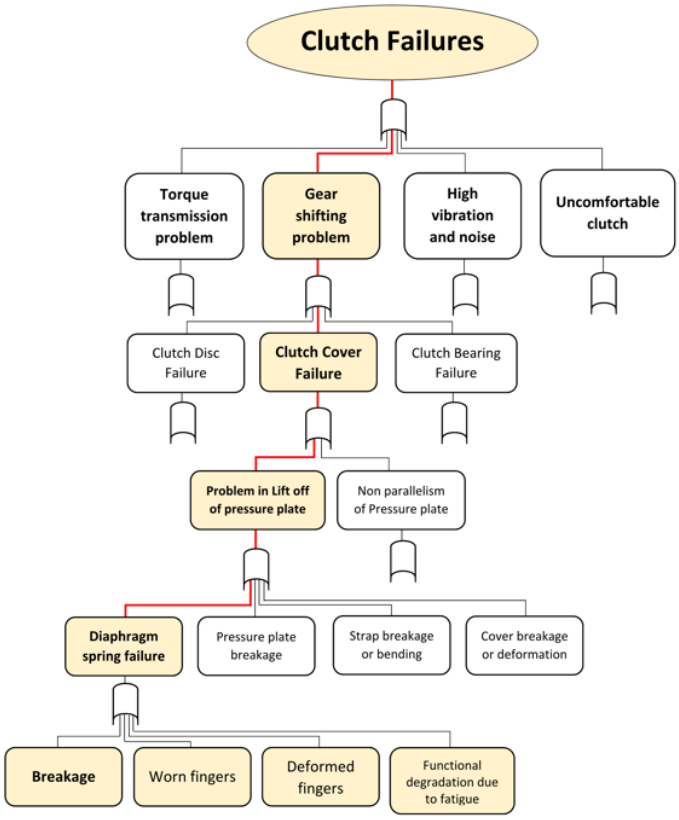

Figure 8 Fault tree analysis of clutch

found four parts of diaphragm spring, facing, coil spring and cushion spring as the most essential components of our clutch system considering function and reliability aspects.

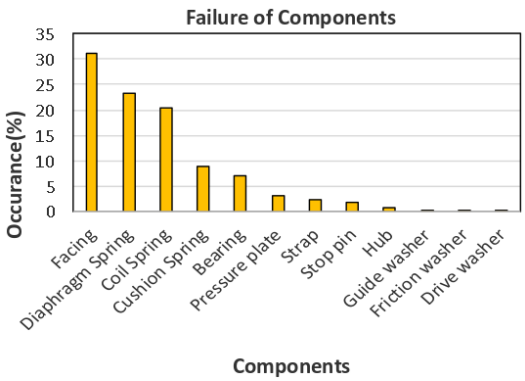

Figure 9 Pareto chart for occurrence history of component failures

Based on all mentioned analyses, our area of focus in this study is on diaphragm spring as the most critical part in such clutch system with respect to design, performance and reliability factors and we are going to investigate failure behavior and reliability characteristics of a type of diaphragm through its definite life test.

In this study, we used five samples of diaphragm spring of a certain material for performing fatigue test. The samples were tested under high frequency ALT on clutch fatigue test machine (as mentioned before) in room temperature and failure results were recorded. Any kind of crack, breakage, deformation and abnormal functional degradation of diaphragm spring during the test is specified as a failure. The results of performing reliability-based tests in form of failure cycles data for samples are represented in Table 1.

Then, we should calculate reliability characteristics through statistical analysis. Using Weibull probability function as the best fit for distribution of observed failure cycles, we will have an approximation of failure behavior of diaphragm spring among samples, which is extensible with a degree of confidence. Fig. 10 represents failure probability plot of Weibull for observed data. Outputs of this test obviously (Anderson-Darling value and P-value are shown) demonstrate goodness of fit of this distribution model to observed data and its effectiveness for formulating reliability estimation.

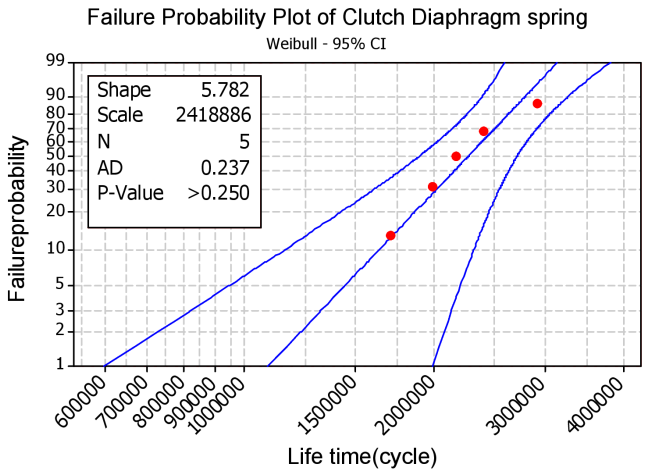

Figure 10 Weibull failure probability plot for observed data

According to the design targets, the product should pass up to one million cycles under test standard condition with a reliability and certain confidence. Then we must evaluate components reliability characteristics at one million cycles of life test. For diaphragm spring part, this objective will be achievable through calculating integral characteristics of validated *Weibull* probability density function resulted from observed data with shape and scale parameters of 5.782 and 2418886 as shown in Fig. 11. As a result, the reliability of diaphragm spring part in life test has been calculated equal to 0.9940 from area under the curve after one million cycles (shaded area). This area is called safe area and the area before that is critical or unreliability zone which parts should pass this area.

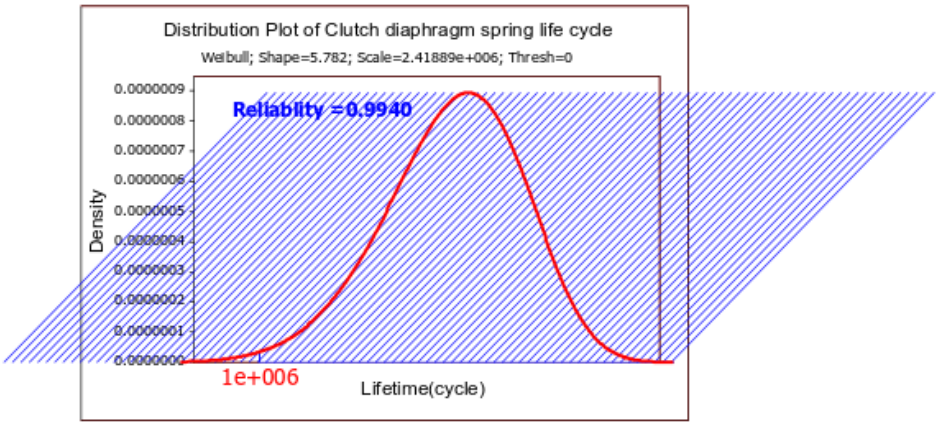

Figure 11 Weibull probability density function-reliability calculation

Descriptive reliability characteristics results for different life cycles are shown in Table 1. As an accepted average for field reliability we may apply ratio of 10 Cycles/Km to transform test cycle into Kilometers of real driving period [28]. However, we should investigate relation between lab-based and field failure probability model through parallel lab and field tests or extract this relation using regression analysis of lab tests under different stress conditions.

Table 1 Descriptive reliability results for different life cycles

Hazard rate	Reliability	Failure probability	Number of cycles
1.2720E-9	0.99989	0.00011	500,000
1.2039E-8	0.99833	0.00166	800,000
3.4996E-8	0.99396	0.00603	1,000,000
5.5202E-8	0.98955	0.01044	1,100,000
8.3684E-8	0.98278	0.01721	1,200,000
1.2271E-7	0.97278	0.02721	1,300,000
1.7490E-7	0.95853	0.04146	1,400,000
2.4326E-7	0.93884	0.06115	1,500,000
3.3121E-7	0.91242	0.08758	1,600,000
4.4259E-7	0.87797	0.12202	1,700,000
5.8172E-7	0.83435	0.16564	1,800,000
7.5335E-7	0.78070	0.21930	1,900,000
9.6281E-7	0.71674	0.28325	2,000,000
1.2158E-6	0.64302	0.35697	2,100,000
1.5187E-6	0.56109	0.43890	2,200,000
1.8784E-6	0.47368	0.52631	2,300,000
2.3024E-6	0.38454	0.61545	2,400,000
2.7987E-6	0.29816	0.70183	2,500,000

In addition, we can investigate other life-based functions to make better view of failure behavior and hazard rate of such type of parts over time. Cumulative failure probability, Reliability (survival) function, hazard and cumulative hazard functions are shown in Fig. 12 to 15 respectively. These graphs which are resulted from equations (7–10), represents the rate that parts will be failed after critical area and how much they may be reliable. The graph of Fig. 12 shows how probability

of failing parts increase after a certain cycle while the graph of Fig. 13 represents similarly how reliability of part decrease over lifetime and after a certain cycle part will be unreliable according to the target value. And finally hazard function graphs predict failure rate of parts over life cycles.

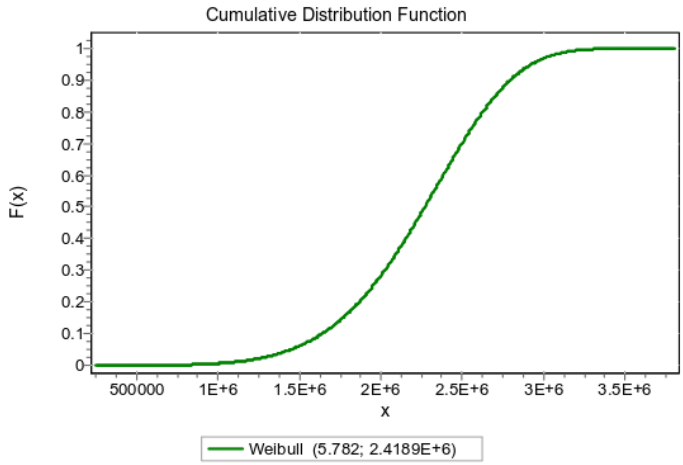

Figure 12 Cumulative failure probability function

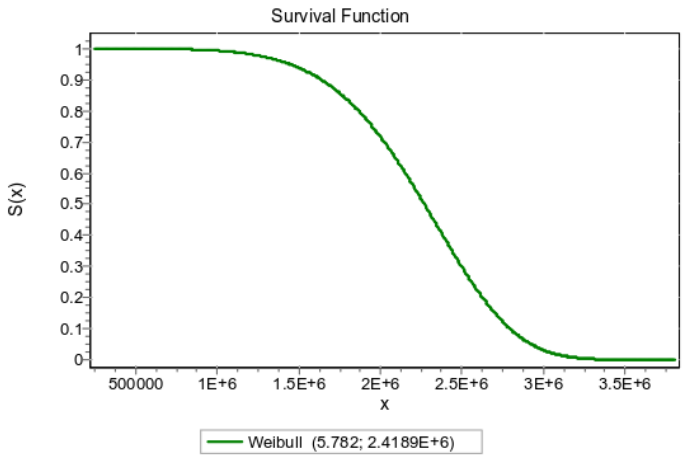

Figure 13 Reliability (Survival) function

We can adopt such approach to analyze reliability characteristics for other critical components of clutch system, which are introduced before, as result of FMECA. At the end of reliability analysis for all critical components, we should see all results in an integrated structure to have a better view of life and reliability characteristics of all components comparing together and investigate effect of superposition of their interactions in the system.

Also, we can have failure probability plots of individual components in a single graph to make better sense of system failure while we are superposing them in reliability block diagram. These analyses make a useful view of criticality level, durability and reliability of components comparing together. At the final step of system reliability calculation, we should make RBD arrangement based on knowledge of previous steps. For our case study, we have constructed the system RBD in a serial arrangement like as shown in Fig. 16. It means the critical components will be arranged in a single path from input to output between engine and gearbox as interacting systems. This is because of type of arrangement and interaction of clutch system components and impact of each component on failure behavior of system. Then according to equation for series system, reliability of such clutch system will be equal to multiplication of individual reliabilities of critical components which have resulted from statistical calculations:

$$\mathrm{Re}_{sys} = \mathrm{Re}_{(e1)} \cdot \mathrm{Re}_{(e2)} \cdot \mathrm{Re}_{(e3)} \cdot \mathrm{Re}_{(e4)} \,. \tag{11}$$

It is obvious that, the final result will be lower than individual component reliabilities. Then one of the most important duties of designer is to design the structure of system in which a way that it leads to a desired system reliability through a program of DFR[6].

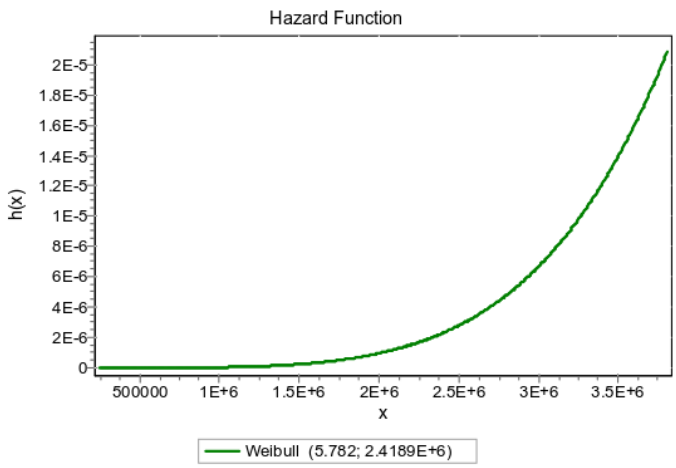

Figure 14 Hazard function

After calculation of system reliability using lab test approach, we can validate the results by field tests as the final step. In this way, we may make a relation between lab based life-reliability characteristics and field reliability via a correction factor. In addition, for formulating life-stress model, we can perform life test in different conditions in order to investigate the effects or weights of test parameters like temperature, frequency and etc. this objective will be achievable through definite accelerated life tests. Superposing all test condition will lead to a final life-stress model of product. These two essential models (failure probability and

[6]Design for Reliability

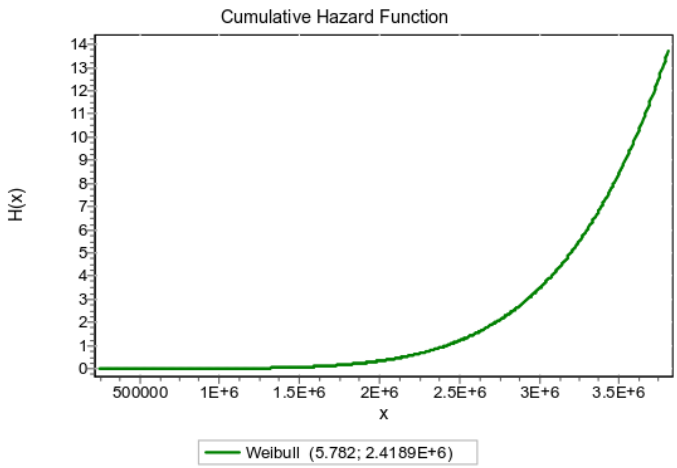

Figure 15 Cumulative hazard function

Figure 16 Reliability Block Diagram structure

life-stress models) will be the base of product reliability comprehensive analysis in future studies for product failure behavior.

4. Conclusions

Reliability as one of the most important outputs of product design, process design and mass production phases, is considered as an essential factor in standards and requirements of design-production-supply cycle of every engineering product nowadays. In this study, we have presented a systematic model for product reliability analysis and implemented this model for a typical clutch system based on laboratory life test to calculate diaphragm spring reliability and failure behavior under high frequency accelerated test. As future works, we can study failure behavior of clutch system under other test conditions as acceleration factors like different mechanical stress or temperature levels in life-stress models. Superposing all test condition will lead to a final life-stress model of clutch system. Reliability includes a major importance in product safety, guarantee, warranty, net costs and customer satisfaction terms studies. Design and production shall be performed somehow that reliability requirements are satisfied. If achieved values, does not meet the targeted reliability and predefined requirements, it should be revised in design and implemented required corrections to improve reliability to desired values. It is obvious that regarding every engineering design, it must be made a compromise between costs and production time in one hand, and quality, reliability and warranty terms in the other hand and the optimized design should be selected finally. This is the main objective of Value Engineering.

References

[1] **Bertsche, B.**: *Reliability in Automotive and Mechanical Engineering*, Springer, 45–57, **2008**.

[2] **O'Connor, Patrick, D.T.**: *Practical reliability engineering*, John Wiley & Sons, 145–173, **2002**.

[3] **Labib, A.**: *Introduction to Failure Analysis Techniques in Reliability Modeling, Learning from Failures*, 19–32, **2014**.

[4] **Shaver, F.R.**: *Manual Transmission Clutch Systems*, SAE International, 21–46, **1997**.

[5] **Wang, W., James, M. Loman, R. G. Arno, Vassiliou P., Edward, R. Furlong, and Ogden, D.**: Reliability Block Diagram Simulation Techniques Applied to the IEEE Std. 493 Standard Network, *IEEE Transactions on Industry Applications,* **2004**.

[6] **Lisnianski, A.**: Extended block diagram method for a multi-state system reliability assessment, *Reliability Engineering & System Safety*, **92**(12), 1601–1607, **2007**.

[7] **Prowell, S.J., Poore, J.H.**: Computing system reliability using Markov chain usage models, *The Journal of Systems and Software*, **73**, 219–225, **2004**.

[8] **Naess, A., Leira, B.J., Batsevych, O.**: System reliability analysis by enhanced Monte Carlo simulation, *Structural Safety*, **31**(5), 349–355, **2009**.

[9] **Anderson, M.C.**: Evaluating the Series or Parallel Structure Assumption for System Reliability, *Quality Engineering*, **21**, 88–95, **2009**.

[10] **Stapelberg, R.F.**: *Handbook of Reliability, Availability, Maintainability and Safety in Engineering Design*, Springer, 45–59, **2009**.

[11] **Dhillon, B.S.**: *Maintainability, Maintenance and Reliability for Engineers*, CRC Press, 89–96, **2006**.

[12] **Verlinden, S., Deconinck, G., Coupé, B.**: Hybrid reliability model for nuclear reactor safety system, *Reliability Engineering and System Safety*, **110**, 35–47, **2012**.

[13] **Pang, H., Yu, T., Song, B.**: Failure mechanism analysis and reliability assessment of an aircraft slat, *Engineering Failure Analysis*, **60**, 261–279, **2016**.

[14] **Jun, L., Huibin, X.**: Reliability Analysis of Aircraft Equipment Based on FMECA Method, *International Conference on Solid State Devices and Materials Science, Physics Procedia*, **25**, 1816–1822, **2012**.

[15] **Shalev, D.M., Tiran, J.**: Condition-based fault tree analysis (CBFTA): A new method for improved fault tree analysis (FTA), reliability and safety calculations, *Reliability Engineering & System Safety*, **92**(9), 1231–1241, **2007**.

[16] **Elsayed, A.E.**: *Reliability Engineering*, John Wiley & Sons, 135–143, **2012**.

[17] **Calixto, E.**: *Reliability, Availability, and Maintainability*, in: 'Gas and Oil Reliability Engineering', Elsevier, 269–470, **2016**.

[18] **Guida, M., Pulcini, G.**: Automotive reliability inference based on past data and technical knowledge', *Reliability Engineering and System Safety*, **76**, 129–137, **2002**.

[19] **Rao, S.S., Tjandra, M.**: Reliability-based design of automotive transmission systems, *Reliability Engineering and System Safety*, **46**, 159–169, **1994**.

[20] **Changhua, H., Zhijie, Z., Jianxun, Z., Xiaosheng, S.**: A survey on life prediction of equipment', *Chinese Journal of Aeronautics*, **28**(1), 25–33, **2015**.

[21] **Pulido, J.**: Reliability Analysis for Components under Thermal Mechanical Loadings', *IEEE Reliability and Maintainability Symposium*, **2013**.

[22] **Klyatis, L.M.**: *Accelerated reliability and durability testing technology*, John Wiley & Sons, Inc., 141–191, **2012**.

[23] **Zaharia, S.M., Martinescu, I., Morariu C.O.**: Life time prediction using accelerated test data of the specimens from mechanical element, *Maintenance and Reliability*, **14**(2), 99–106, **2012**.

[24] **Rai, B., Singh, N.**: Hazard rate estimation from incomplete and unclean warranty data, *Reliability Engineering and System Safety*, **81**, 79–92, **2003**.

[25] **Coit, D.W., Dey, K.A.**: Analysis of grouped data from field-failure reporting systems, *Reliability Engineering and System Safety*, **65**, 95–101, **1999**.

[26] **Majeske, K.D.**: A mixture model for automobile warranty data, *Reliability Engineering and System Safety*, **81**, 71–77, **2003**.

[27] **Ph, Y.S., Bai, D.S.**: Field data analyses with additional after-warranty failure data, *Reliability Engineering and System Safety*, **72**, 1–8, **2001**.

[28] **Teixeira, C., Cavalca, K.**: The Reliability as Value Factor in the Improvement of Products. Case Study: Automotive Clutch System, *SAE Technical Paper*, 01-3281, **2004**.

[29] **Adriano, C., Teixeira, R., Cavalca, K.**: Reliability as an added-value factor in an automotive clutch system, *Quality and Reliability Engineering International*, **24**(2), 229–248, **2008**.